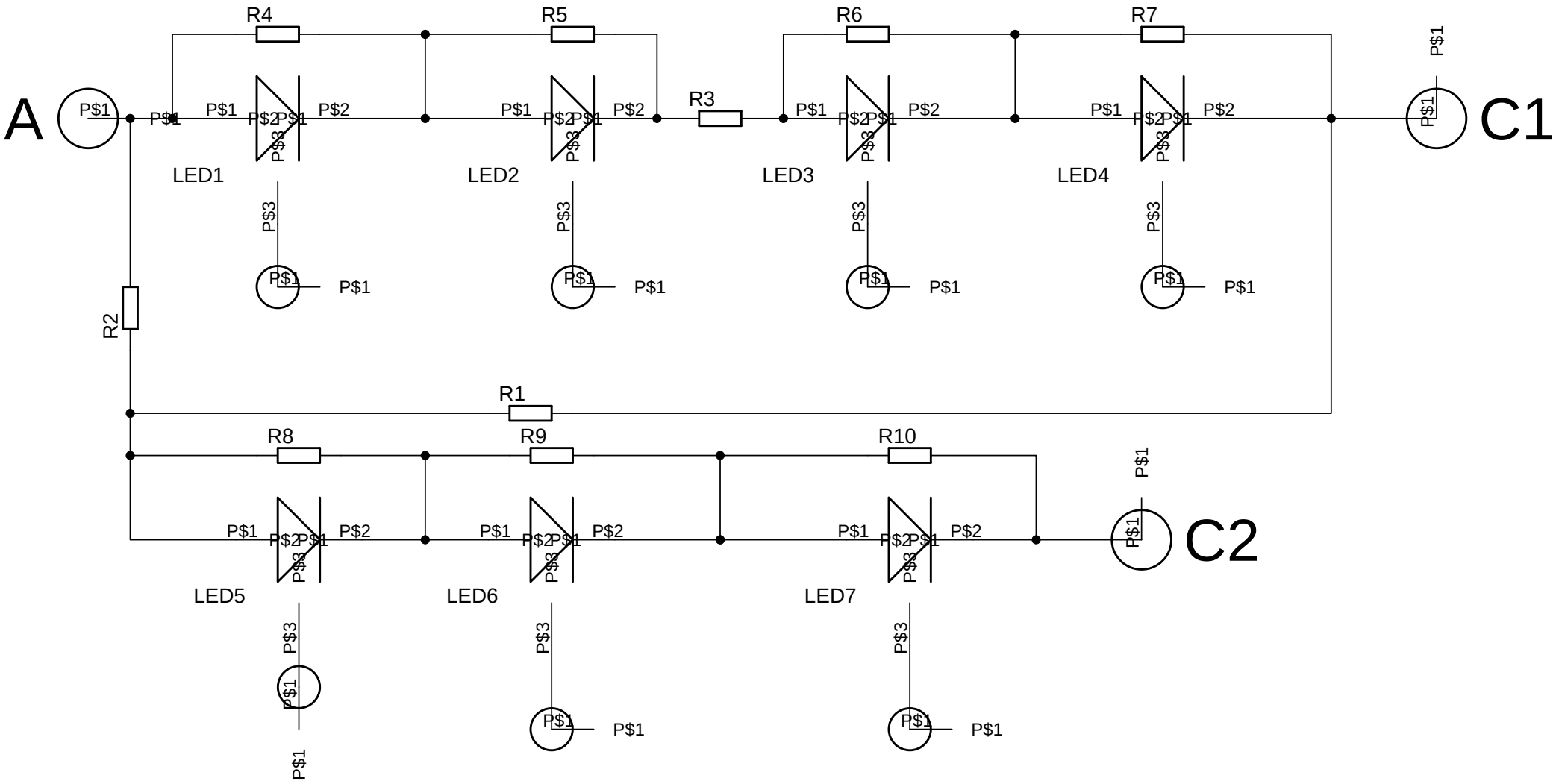

14.01.2016 17:01:09 f=1.47 C:\Users\kaschroed\Documents\Eagle_daten\projects\High Power\OSLON_7_LENS_RD_1_1.sch (Sheet: 1/1)